Measurements - Therapod X HR
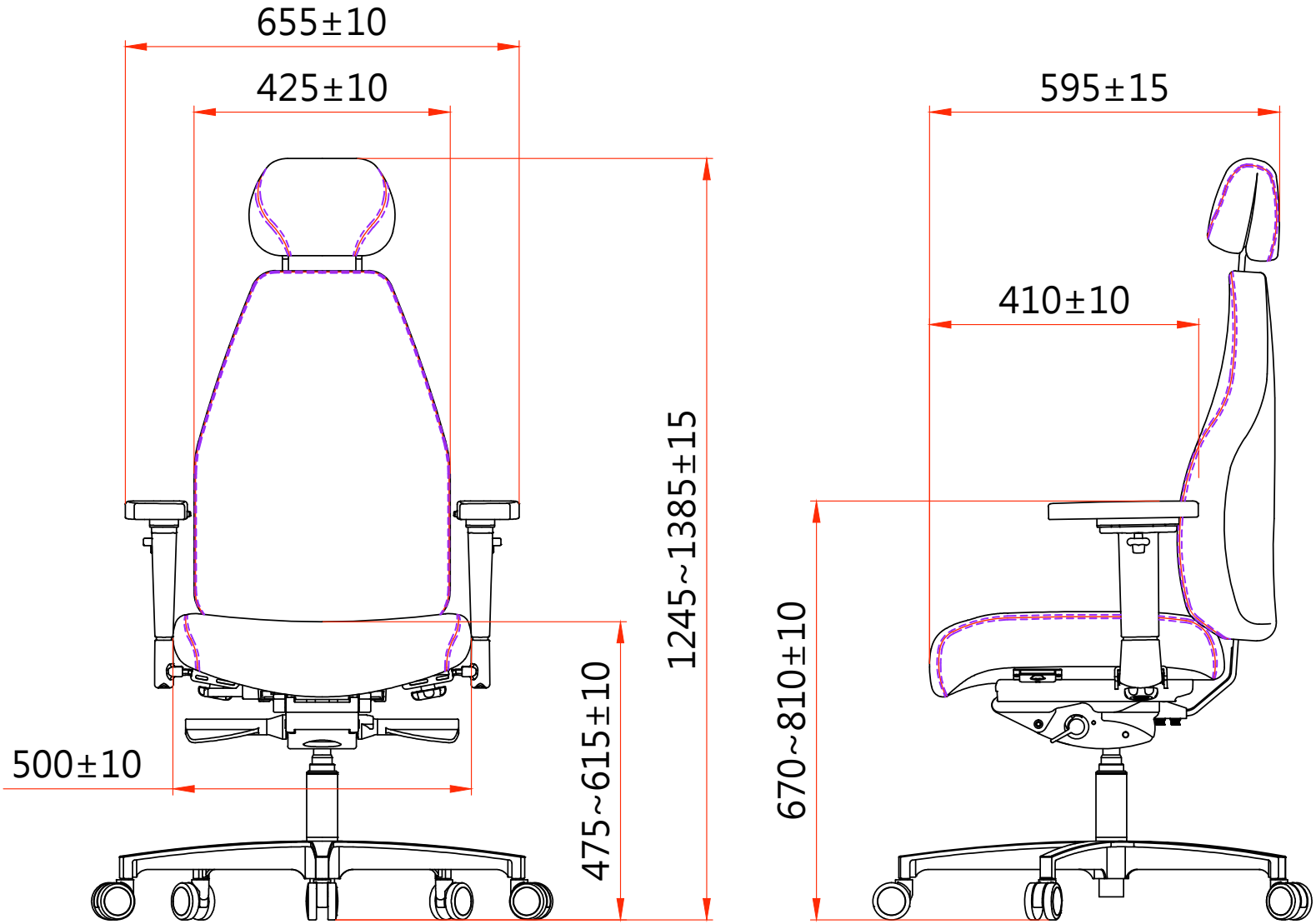
Sit And Move.