Measurements - Therapod X Compact
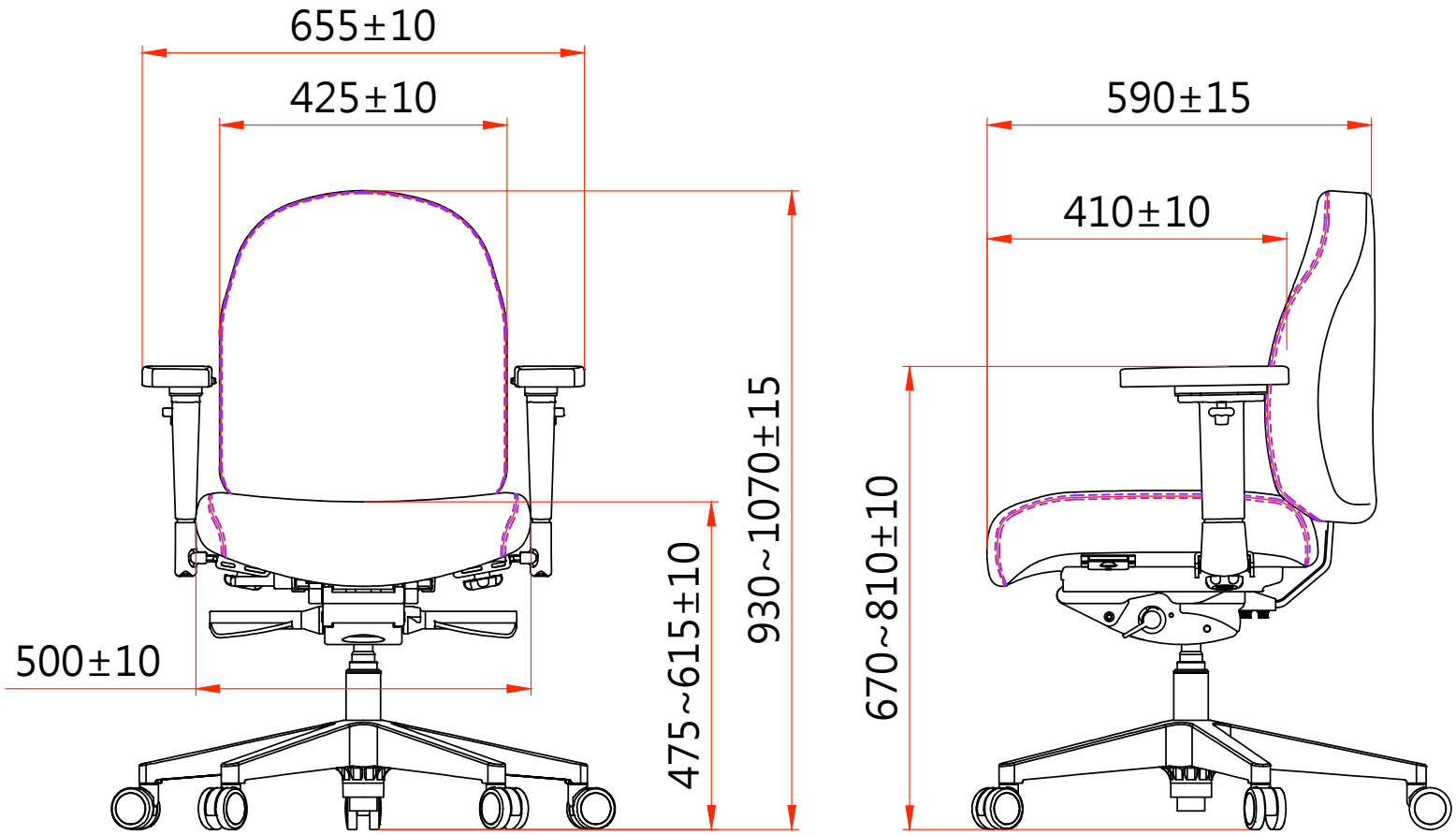
Sit And Move.